FRITZ HANSEN

ANT™

Product Fact Sheet

ANT™

The Ant™ chair's visual expression is delicate and artful, much like the curves of a musical instrument. Designed by Arne Jacobsen in 1952, the chair is made from nine layers of pressure moulded veneer. Its elegant shape disguises its remarkable strength and comfort.

PRODUCT TYPE
Chair

ENVIRONMENT
Indoor

DESIGNER / YEAR OF DESIGN
Arne Jacobsen, 1952

ABOUT THE DESIGNER
The collaboration between Arne Jacobsen and Fritz Hansen dates back to 1934. It was not until 1952 however that the team got its breakthrough with the Ant™. It was succeeded by Series 7™ in 1955, thereby enabling both Jacobsen and Fritz Hansen to write their names into furniture history.

MODELS
3100: Chair w. 3 tube legs (stackable up to 8 chairs)*
3101: Chair w. 4 tube legs (stackable up to 12 chairs)*

MATERIAL

Shell:
The shell of the Series 7™ chair is made of pressure moulded veneer - 9 layers in total (7 layers of inner veneer and 2 layers of outer veneer on front and back. The inner veneer is always beech, and the outer veneer is available in various types of natural veneer. The chair is also available in two finishes: coloured veneer (ash) or fully lacquered veneer, in various colours.

All models are also available with front upholstery in textile or leather. The shell is padded with polyurethane (PUR) foam. A water-soluble glue is used for bonding of upholstery to the foam and foam to the shell.

Base:
The base is made of 14 mm steel tubes with either 3 or 4 legs and leg ferrules of black synthetic material. The base is mounted with black support spacers and a black cover cap. The bases are available in chromed or powder coated steel.

Model 3101 is available in two seat heights: 43/46 cm | 17.3/18.1 in.

MATERIALS IN %:

3101 (without upholstery):
Wood: 56%
Steel: 42%
Plastic: 2%

3101 (front upholstered):
Wood: 49%
Steel: 36%
Foam: 4%
Textile: 8%
Plastic: 3%

** Without upholstery.*
Upholstered chairs can be stacked (max. 6 pcs.) using specified protective material.

FEATURES
- Seat cushion (3 variants)
- Linking device (3101)
- Felt glides (3100, 3101)
- Transport dolly:
  - Large for 40 chairs (3101)
  - Small for 8 chairs (3100), 12 chairs (3101)
- Spareparts: Wide range of spareparts for all models

SURFACES

Shell:
The shell is available in 16 colours:

The shell is available in 6 types of natural veneer:

Base:
The base is available in the following variants:

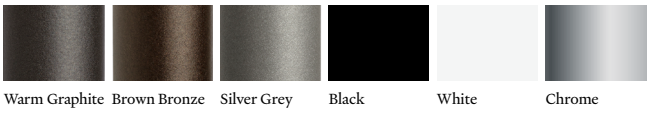

UPHOLSTERY
Ant™ is available with upholstery in the following selection of textile and leather types:

- Christianshavn™
- Category 1: Belfast, Canvas, Capture, Fame, Re-wool, Remix, Technicolour, Tonus
- Category 2: Acca, Cifrado, Clay, Fiord, Hallingdal, Karakorum, Moss, Steelcut, Steelcut Trio, Sunniva, Vanir, Vidar
- Category 3: Essential, Fuse, Mammuth, Voulez-Vous
- Category 4: Haze, Soft
- Category 5: Grace, Natural

The seat cushion is available in leather in 3 variants:
- Essential, Black
- Essential, Walnut
- Wild, Walnut

MADE-TO-ORDER (BESPOKE)
Non-standard configurations (special colours, upholstery etc.) are available upon request at a minimum order quantity.

CERTIFICATION
- PEFC™ PEFC/09-31-068: The Ant™ is PEFC certified. This PEFC certification ensures the wood is from forests that are managed with respect for the ecological, social and ethical standards.

- GreenGuard Gold: The Ant™ is GreenGuard Gold certified. GreenGuard certification is an emission certification for indoor air quality. Products with ultralow-emitting materials can achieve GreenGuard Gold.

For more information about environment and manufacturing processes, please download our environmental information sheet at: **fritzhansen.com**

TEST
The Ant™ complies with the requirements for EN 1728 + EN 1022* Safety, strength, durability and stability for visitor's chairs non domestic seating.

*Only applies for model 3101

WEIGHT
Models without upholstery:
3100: 3.1 kg / 6.8 lb
3101: 3.4 kg / 7.5 lb

Models with upholstery:
3100: 3.9 kg / 8.6 lb
3101: 4.1 kg / 9.1 lb

COUNTRY OF ORIGIN
Poland

PRE-ASSEMBLED
Yes

PACKAGING
The chair is shipped in cardboard box. Inside the box, the item is wrapped in a PE bag to protect from dust, as well as vulnerable corners are protected with PE foam.

PE foam and cardboard are used as protection between stacked chairs.

All packaging material can be recycled depending on local capability.

CLEANING AND CARE
Find recommendations for cleaning and care at:
fritzhansen.com/maintenance

REPAIR, DISPOSAL AND REUSE
In case of repair and disposal the chairs can be disassembled into two parts (shell and base). The base and all other metal parts can be recycled. Check local regulations for recycling options and whether there is potential for reuse.

WARRANTY
Fritz Hansen provides a standard 10-year warranty on all Arne Jacobsen shell chairs: Ant™, Grand Prix™, Lily™ and Series 7™.

On any material, textile or leather, which is not listed in the price list on a specific product, the warranty is 2 years.

Additional warranty conditions can be found at:
fritzhansen.com/warranty

Dimensions

3100

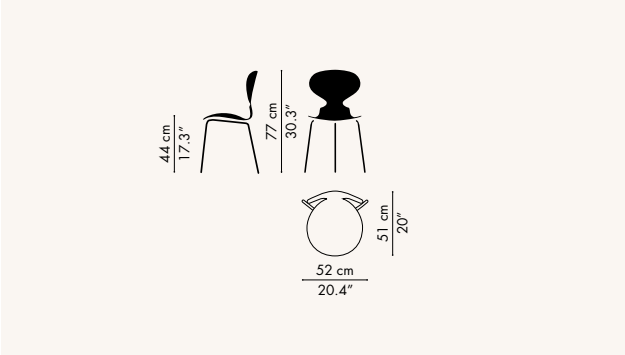

Features: Stackable (8 pcs.)*

3101

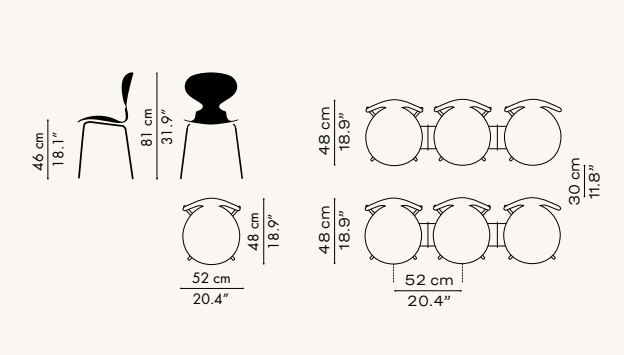

Features: Stackable (12 pcs.)*, Add linking device
Seat heights: 43 cm/17.3 in**, 46 cm/18.1 in (standard)

SMALL TRANSPORT DOLLY

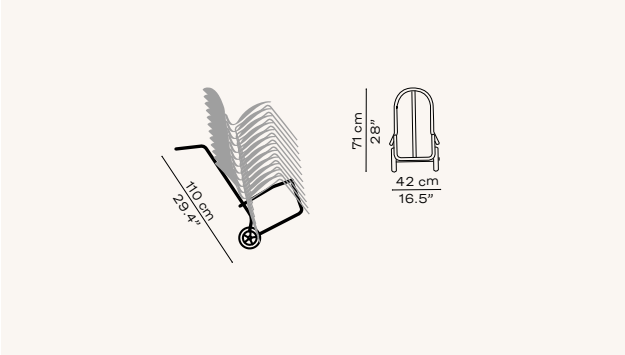

Capacity: 8 pcs. (3100) / 12 pcs. (3101)

LARGE TRANSPORT DOLLY

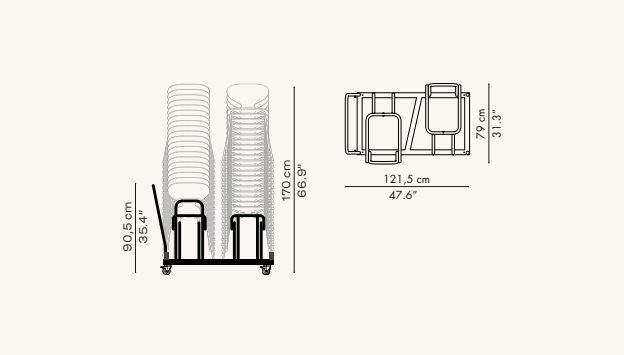

Capacity: 40 pcs. (3101)

3101SC

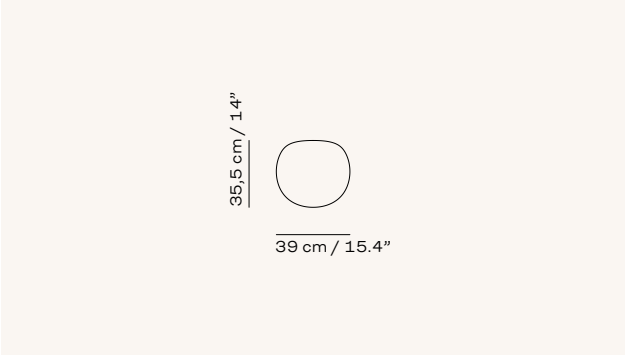

**Without upholstery*
***Overall height decreases/increase correspondingly to the standard chair height*